National Journal of Antennas and Propagation
RESEARCH ARTICLE
National Journal of Antennas and Propagation, ISSN: 2582-2659 Vol. 7, No. 2, 2025 (pp. 321-333)
WWW.ANTENNAJOURNAL.COM

Cross-Layer Design of QoS-Aware Multimedia Streaming with Integrated Propagation and Channel Modelling in Heterogeneous Wireless Networks

Rohit Goyal[1]*, Vibhor Mahajan[2], Rangegowda R.[3], Bernatin T.[4], Prabhat Kumar Sahu[5], Sudhakar Reddy[6]

[1]*School of Engineering & Computing, Dev Bhoomi Uttarakhand University, Uttarakhand, India.*
[2]*Centre of Research Impact and Outcome, Chitkara University, Rajpura, Punjab, India.*
[3]*Assistant Professor, MBA Department, Presidency College, Bengaluru, Karnataka, India.*
[4]*Associate Professor, Department of Electronics and Communication Engineering, Sathyabama Institute of Science and Technology, Chennai, Tamil Nadu, India.*
[5]*Associate Professor, Department of Computer Science and Information Technology, Siksha 'O' Anusandhan (Deemed to be University), Bhubaneswar, Odisha, India.*
[6]*Professor, Department of Physics, School of Sciences, JAIN (Deemed-to-be University), Bangalore, Karnataka, India.*

KEYWORDS:

Cross-Layer Architecture,
QoS-Aware Streaming,
Heterogeneous Wireless Networks,
Propagation Modelling,
NS-3 Simulation,
Multimedia Delivery,
Adaptive MAC,
Channel Estimation,
Video Quality Enhancement

ARTICLE HISTORY:

Received: 02.05.2025
Revised: 20.05.2025
Accepted: 01.08.2025

DOI:
https://doi.org/10.31838/NJAP/07.02.30

Abstract

The video streaming aspects and other multimedia applications that have increased at an explosive rate in the heterogeneous wireless networks (HWNs) have presented complex issues in connection with continuous quality of service (QoS). The traditional layered network models are not always good enough to handle the dynamic characteristics of a network like mobility, change in channel quality, and congestion. This research suggests further development of a new cross-layer model that has propagation awareness of the physical (PHY) layer model, adaptive MAC controls, and application-level smarts, so that multimedia streaming is robust and QoS-sensitive. The PHY layer utilizes realistic models, such as log-distance path loss, log-normal shadowing, and Nakagami-m fading, to model variation in the channel. The MAC layer automatically adapts the contention parameters to the network load, as well as multimedia traffic priorities queues. An improved routing protocol, AODV, which considers channel state and delay, is applied to the network layer, and the application layer adjusts the video encoding rates depending on the end-to-end feedback and buffer occupancy. The whole system has been used and simulation tests applied in NS-3.36 simulation environment when we are using H.264 video trace traffic over UDP within a 50-node wireless topology with diverse mobility environments. The experimental evidence shows that the proposed architecture performs much better than baseline models in terms of packet delivery ratio, which is 91.7%, a decrease in end-to-end delay by up to 48% and enhancing video quality with the peak signal-to-noise ratio (PSNR) of 35.2 dB. These results confirm the utility of cross-layer optimization with respect to offering resilient as well as high-quality multimedia transmission across complex wireless networks.

Authors' e-mail ID: Dehradunsocse.rohit@dbuu.ac.in; vibhor.mahajan.orp@chitkara.edu.in; rangegowda.r@presidency.edu.in; bernatin.etc@sathyabama.ac.in; prabhatsahu@soa.ac.in; r.sudhakar@jainuniversity.ac.in

Authors' Orcid ID: 0000-0001-7978-4079; 0009-0007-8272-1547; 0009-0006-9429-0441; 0000-0002-0590-6392; 0000-0002-0460-9783; 0000-0001-8207-3526

How to cite this article: Rohit Goyal, Cross-Layer Design of QoS-Aware Multimedia Streaming with Integrated Propagation and Channel Modelling in Heterogeneous Wireless Networks, National Journal of Antennas and Propagation, Vol. 7, No. 2, 2025 (pp. 321-333).

Introduction

Over the past years, the consumption of wireless multimedia content, especially video in ultra-high definition and real-time interactive applications, has been on a sharp rise. Wireless communication systems have been burdened to tremendous amounts because of the introduction of mobile devices, edge computing, as well as bandwidth-intensive services.[1,21,22] To satisfy various application demands and deployment conditions, heterogeneous wireless networks (HWNs), which is an umbrella terminology associating adjacent wireless technologies (e.g., Wi-Fi, LTE/5G, and wireless mesh networks (WMNs), and mobile ad Hoc Networks (MANETs)) have appeared.[2] Nevertheless, end-to-end provisioning of quality of service (QoS) in such dynamic and decentralized networks is very problematic, particularly in the case of multimedia traffic which is very sensitive and causes delay, jitter, drop put packet and the throughput variation.[3] Conventional layered communication paradigms (e.g., OSI or TCP/IP model) are constructed with stringent modularity, with every layer having total control. Although this abstraction makes it easy to design and maintain a protocol, it kind of injects inefficiency.[20] In multimedia streaming, choices isolated at one layer of computation, for example, routing decisions on the network level, encoding rates on the application level, tend not to indicate the current channel or network status. An example would be that when a certain channel status is bad, the application would still tend to transmit at a high bitrate and thus cause congestion, retries, and decrease in quality. A number of current solutions have sought to resolve these issues by employing the use of QoS-aware routing, adaptive video streaming, and MAC-layer congestion control mechanisms.[4] These protocols (AODV, DSR) have been augmented with metrics of QoS (e.g., delay or bandwidth availability) and application-layer QoS features such as DASH (Dynamic Adaptive Streaming over HTTP) reduce the video bitrate based on client-side estimates of buffering and incoming rate.[5] On the MAC-level, priority queuing or IEEE 802.11e is also a MAC-level fix trying to offer differentiated multimedia traffic.[6] The techniques however tend to act individually and are not integrated with lower-layer channel characteristics as well as upper-layer traffic requirements.

Further, a large number of protocols implicitly assume an idealized model of wireless communication when used or make use of oversimplifications that fail to consider real-world effects related to multipath fading, log-normal shadowing, and spatial-temporal variation in signal propagation. Consequently, routing as well as rate adaptation and congestion control decisions become reactive and suboptimal, resulting in poor QoS when under mobility, interference, or load kick.

To fill these breeches, we will put forward a new cross-layer multimedia streaming system on HWNs, which integrates the higher multilayers of a communication stack in an unified manner. This framework aims at supporting real-time QoS adaptation by an integration of data not only at the layers (PHY, MAC, network, and application) but also among layers.

Realistic models of propagation and channel at the PHY layer are used, in particular: log-distance path loss, Nakagami-m fading, and shadowing are used to represent link conditions more realistically at the PHY layer. Such knowledge is passed on to the MAC and network layer, where dynamic updating of the contention windows, QoS-sensitive routing, and congestion response systems are enabled. The application layer, in its turn, adapts multimedia encoding rates in response to the statistics on the lower layers (e.g., signal-to-noise ratio, delay) as well as local buffer conditions. Such integrated practice allows making decisions proactively and at an early stage, which reduces the gap between network performance and application requirements.

The whole architecture is simulated in the NS-3, and tested in a variety of scenarios that feature different node densities, mobility trends, and traffic patterns. The suggested cross-layer design leads to notable realizations of packet delivery ratio (PDR), end-to-end delay, and video quality (PSNR), as can be observed in comparative simulation with base-line models. This proves the as-yet-suggested realization intending to be like the one used in next-generation wireless systems and its potential for real-life implementation.

Related Work

In multimedia streaming in HWN, QoS assurance has been the need, which brought in a lot of research effort at several layers at the communication stack. Many solutions have come up at the application, MAC, and network layer to enhance the delivery of multimedia; however, the majority of these are single layer in nature and lack panoramic cross-layer optimization. In addition, the realistic PHY-layer effects/property in terms of multipath fading, shadowing, and path loss that are vital in accurate modelling of the wireless environment are mostly ignored by the existing approaches.

Techniques of Application and Transport Layer

Dynamic techniques, including the DASH, have frequently been employed to dynamically alter the video bitrates according to buffer conditions and access measured values.[7] Such techniques, although adequate in stable conditions, are retroactive in character and are not very quick to adjust to the fast wireless variations that may occur because of mobility or interference. The same applies to transport-layer adaptations such as forward error correction (FEC) or rate-based congestion control, which have demonstrated performance advantage,[8] albeit with localized benefit confined to either high-mobility or noisy settings.

Approaches of Network Layer

A few extensions of classical routing protocols like AODV, DSR with QoS awareness (e.g., Bandwidth and delay constraints) have been used in the network layer to achieve better guaranty in delivery of packets representing real-time traffic at the network layer.[9] Nonetheless, such protocols do not always adapt with channel conditions, and the routing is determined without referring to PHY-layer. Multipath routing algorithms'[10] weight redundancy and load balancing and are still based on limited measures such as hop number and queue length.

MAC Layer Improvements

QoS has also been addressed in the MAC layer. IEEE 802.11e has added the enhanced distributed channel access (EDCA), which allows queuing and prioritized access to multimedia packets.[11] Adaptive MAC schemes go further to adjust sizes of the contention windows to traffic type and buffer state.[12] Although these mechanisms improve local access to the medium, they do not typically have any knowledge of either PHY-layer impairment or network-layer routing aspect.

Cross-Layer Techniques

Cross-layer approaches have been considered to deal with the weaknesses of conventional structures. Reference[13] has made suggestions on the rate-adaptive streaming scheme taking advantage of client-side buffering and throughput estimation without modeling the channel or fading. Reference[14] adopted the MAC-layer feedback scheme to adapt the rates at the application level, but their solution did not incorporate PHY-layer channel parameter, for example, SNR or path loss. The contribution that stands out the most is the IEEE 802.21 standard,[15] whose contributions enable heterogeneous media-independent handovers. But, it still has no real-time QoS assurance mechanisms of streaming media or has operations that combine application-based adaptation and channel aware routing.

Another more recent paper by El Khatib et al.[16] proposed a QoS-aware routing scheme in VANET employing signal metrics of quality metrics; but it is applicable only to specific vehicular scenarios and cannot be effectively used with adaptation strategies at the application layers. Equally, cross-layer congestion-aware or cross-layer solutions suggested in reference[17] are congestion related and concerned with throughput and buffer levels excluding propagation insight at the PHY layer.

Limitations and Research Gaps

However, in spite of this progress, the current body of literature still shows that there are still a number of limitations:

- The lack of proper interoperability of PHY-layer propagation modeling and upper-layer adaptation.
- Lack of the coherent feedback that allows optimal QoS to be maximized in an end-to-end manner.
- Where simpler assumptions on wireless environments that do not take into account impairments in the real world as shadowing and multipath fading.

Novelty of the Proposed Work

The proposed study addresses these gaps by designing a fully integrated cross-layer framework (CLF) that combines realistic propagation-aware channel modeling (including path loss, fading, and shadowing) with adaptive MAC control and application-level multimedia rate management.[18] Unlike prior efforts, this framework facilitates multilayer decision-making based on real-time feedback across the PHY, MAC, network, and application layers, offering significantly enhanced performance under varying channel conditions and node mobility scenarios. In addition, emerging research in AI-driven networking introduces reinforcement learning (RL) and deep learning (DL) to optimize QoS decisions dynamically. These techniques learn from network patterns to adapt streaming parameters, schedule transmission slots, or reconfigure routes based on predicted channel degradation.[19] While promising, such solutions often require large-scale training data and complex model integration, which limits their immediate applicability in real-time HWNs. The proposed framework, though rule-based, is modular and could be extended to include RL-based decision engines.

System Architecture

The design of the proposed system is holistic cross-layer architecture aimed at the provision of high-quality, delay-sensitive multimedia content over HWNs. Architecture mechanisms support real-time feedback and decision-making at the PHY, MAC, network, transport, and application levels; architectural mechanisms circumvent the formal demarcations of the traditional layered architecture. A cross-layer enhancement is performed on each layer, which exposes internals of each layer to other layers as well as implements adaptive means to information exchange with remote layers; a cross-layer enhanced and adaptive multimedia streaming experience based on QoS is born.

PHY Layer

The bottom of the communication stack is enhanced by fine granularity on channel modelling to truly represent the practical characteristic of channel propagation. Nakagami-m fading is implemented to represent a level of multipath environment as either severe or less than the urban or semi-urban HWN implementation is concerned. Moreover, the possibility of the signal obscuration because of the obstacles like buildings and foliage are simulated by log-normal shadowing that is introduced. Quality indicators/measurement of the channels such as signal-to-noise ratio (SNR) or path loss and fading severity will be estimated periodically and communicated to MAC and the network layer so that an informed decision is taken.

MAC Layer

MAC layer is formulated to facilitate priority access and avoid collision by multimedia traffic. It uses an adaptive CSMA/CA (carrier sense multiple access with collision avoidance) in which the contention window is periodically changed depending on the state of network congestion and channel. In order to further serve multimedia QoS, the MAC layer uses some forms of priority queueing, so that packets carrying video streams can be prioritized so as to be scheduled and transmitted before the best-effort streams. Traffic scheduling and rate control are jointly optimized by sharing MAC-level statistics (retransmission rates, queue lengths, and backoff delays) with the upper layers.

Network Layer

A version of the ad hoc on-demand distance vector (AODV) routing protocol is used at the network layer and is modified with delay and QoS- awareness. The delay-network, compared to the standard AODV, uses other metrics which in routing process includes, but is not limited to, queueing delay, link stability, and signal strength. Unlike shortest path routing, in its route selection, it also takes into consideration the estimated QoS performance in the projected path, and hence, there is likelihood that the chosen paths would support the multimedia stream with minimal degradation. Inputs of channel states at PHY add to the avoidance of routes which can be fraught with common link breakdowns or seriously fading.

Transport Layer

As multimedia streaming is delay sensitive, the transport layer uses the user datagram protocol (UDP) to prevent the latencies imposed on retransmission in TCP. A lightweight FEC mechanism is however incorporated to facilitate the impact of the packet losses, particularly of the fading wireless links. FEC introduces some redundancy into the packets that are sent and thus the receiver can overcome occasional packet loss without regenerating the lost packets and thus smooth playback can occur and jitter is minimized.

Application Layer

A dynamic bit rate adaptation is done in the application layer depending on continuous evaluation of the network and play out buffer. It constantly examines end-to-end delay, jitter, and buffer occupancy, and it makes use of these data to modify the encoding parameters of the multimedia stream. As an example, suppose the system monitors a growing latency or buffer underflows, the system automatically adjusts the video resolution or frame rate to avoid interruptions during the time the video is played. On the other hand, whenever the network conditions are good, it scales in the streaming quality to the best of user experience. MAC-layer feedback can also be interpreted by this layer to change the behavior of transmission proactively so that congestion which is extremely detrimental does not severely affect performance. Figure 1 depicts layer-wise feedback interface in the proposed cross-layer framework.

Channel and Propagation Modelling

Another important requirement in the wireless multimedia communication is the precise modelling of the signal propagation to enable effective cross-layer optimization. These include the PHY-layer properties of fading, shadowing, and path loss (attenuation and path loss), which

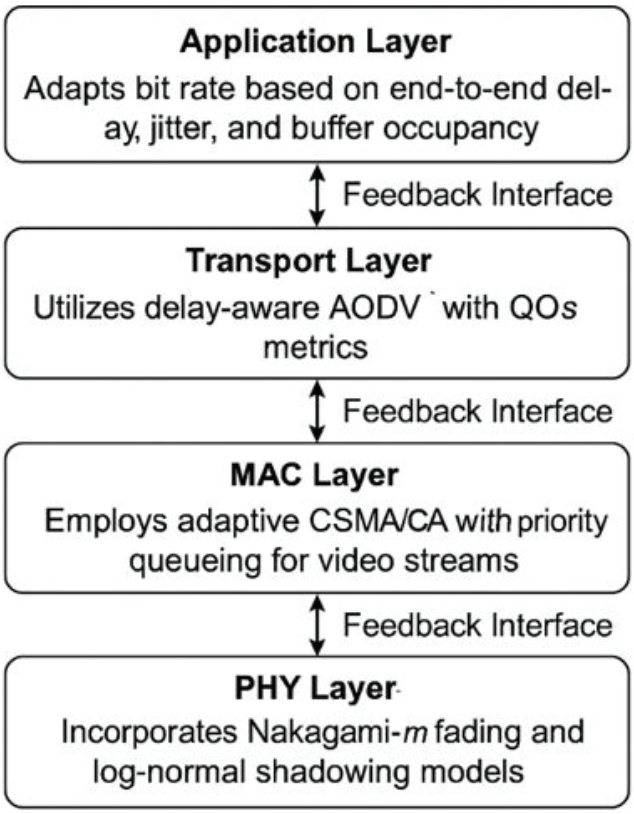

Fig. 1: Layer-wise feedback interface in the proposed cross-layer framework

directly influence the quality of a transmission and can influence the upper-layer routing, queue policies, and multimedia compression decisions. Thus, the suggested system incorporates full-scale model of propagation to emulate and react to realistic wireless channel circumstances in HWNs.

Modelling of the Path Loss

Statistical modelling log-distance path loss model is used to model large-scale signal-power attenuation with distance. This model does not include a path loss exponent n which varies based on the environment (urban, suburban, or indoor). In this research, the path loss exponent given the value n=3.5 is chosen which can be applied to both urban and semi-urban conditions in the event of moderate obstruction and signal scattering. The provided equations of log-distance path loss Model, in Equation 1:

$$PL(d) = PL(d_0) + 10n\log_{10}\left(\frac{d}{d_0}\right) + X_\sigma \quad (1)$$

Where:

- $PL(d)$: Path loss at distance d
- $PL(d_0)$: Path loss at reference distance
- n: Path loss exponent
- X_σ: Shadowing component (Gaussian, std. dev. σ)

Shadowing Effects

Log-normal shadowing is added to simulate variation of signals because of obstructions (e.g., buildings, trees). It adds randomness into the path loss model where the shadowing variance is 8 dB, which is a decent fluctuation in the environment. This provides the system the ability to cope with the variable link qualities among topologies.

Small-Scale Fading

In the case of small-scale multipath fading, the Nakagami-m distribution is applied because it is flexible, in that it can be used to model the various fading environments. The fading parameter m = 1.5, m = 1.5 is a moderate value of fading with a value of 1.5, applicable on mixed mobility and obstruction conditions. It is a more general version of the Rayleigh fading, and it largely coincides with the real-world experience in an urban implementation. The PDF of the Nakagami-m fading is presented in equations, in Equation 2:

$$f(r) = \frac{2m^m r^{2m-1}}{r(m)\Omega^m} e^{\frac{-mr^2}{\Omega}} \quad (2)$$

Where:

- r: Signal amplitude
- m: Fading parameter
- Ω: Mean signal power

Operational Frequency and Power

The Wi-Fi wireless system has a center frequency of 2.4 GHz, which is commonly used in all unlicensed application frequencies. It sets the transmission power to 20 dBm to compromise between covering and interfering with dense deployments of wireless.

These PHY-layer models are accommodated in the loop of the simulation framework (NS-3) and act as basis for the dynamic estimation of QoS, proactive routing, and MAC-level contentions adjustments. SNR and link stability computed using these models are shared in real time to be propagated upward to assist the routine according to it and the adaptability of the application-level rates. Parameters used for channel and propagation modeling is mentioned in Table 1.

Figure 2A shows the fading and shadowing profile across a sample wireless region, indicating signal strength variation with distance. Figure 2B compares path loss versus distance, showing the log-distance model and empirical data, illustrating the relationship between path loss and distance.

Antenna Effects on Propagation and QoS

There is a profound impact of radiation properties of the antennas in heterogeneous wireless nodes, for example, omnidirectional (Wi-Fi APs) and directional/multibeam (5G gNBs) antennas, in the determination of the effective link quality and propagation patterns. These beams directly affect the broadcast coverage of the signal, the direction of the beam, the reuse of space, and finally the PDR and the QoS behavior in multimedia streaming applications.

As an example, we shall discuss some of the common forms of antenna:

- Omnidirectional Antennas: theoretical uniform coverage that is prone to interference, and low SINR in high-density deployments.
- Directional Antennas: It concentrates RF energy in specific directions, optimizes link budget, and minimizes packet loss in desired streams.
- MIMO Antennas: It will support higher QoS throughput, multipath and multipath fading robustness, spatial diversity, and beamforming.

The relationship between the antenna beamwidth, gain, and antenna orientation has to be incorporated in channel modeling and routing process. As an example, 5.2 GHz (Wi-Fi) and 28 GHz (5G millimeter-wave (mmWave)) directional antennas have entirely different coverage patterns controlled by wavelength and path loss effects.

Table 1: Parameters used for channel and propagation modeling

Parameter	Value
Path Loss Model	Log-Distance (n = 3.5)
Shadowing Variance	8 dB
Fading Model	Nakagami-m (m = 1.5)
Frequency	2.4 GHz
Transmission Power	20 dBm

(A)

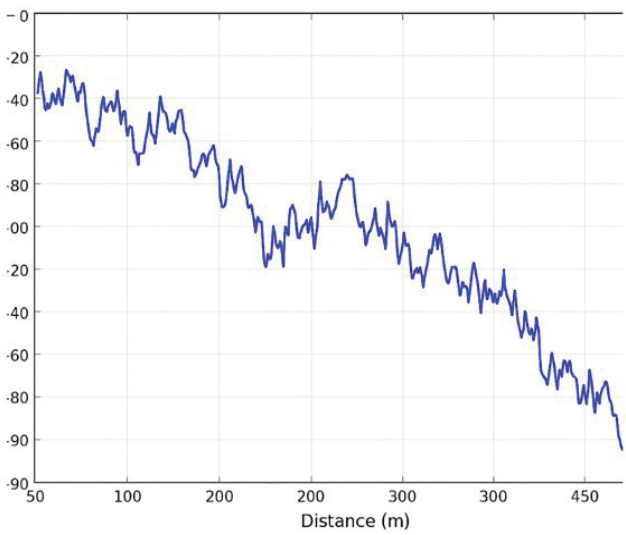

(C)

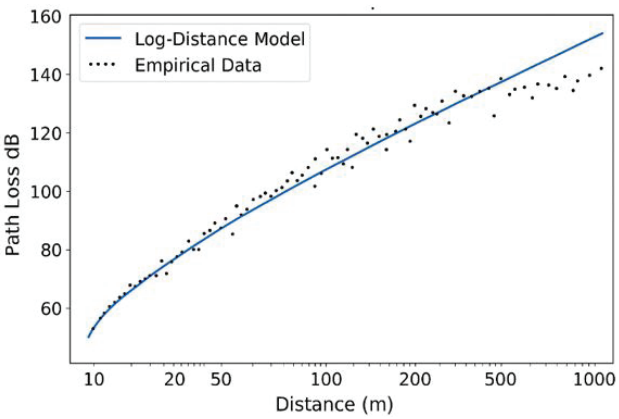

(B)

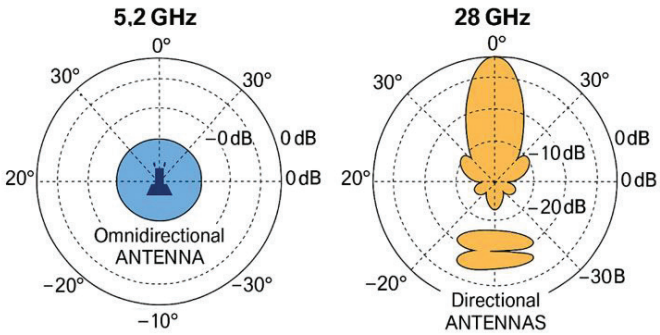

(D)

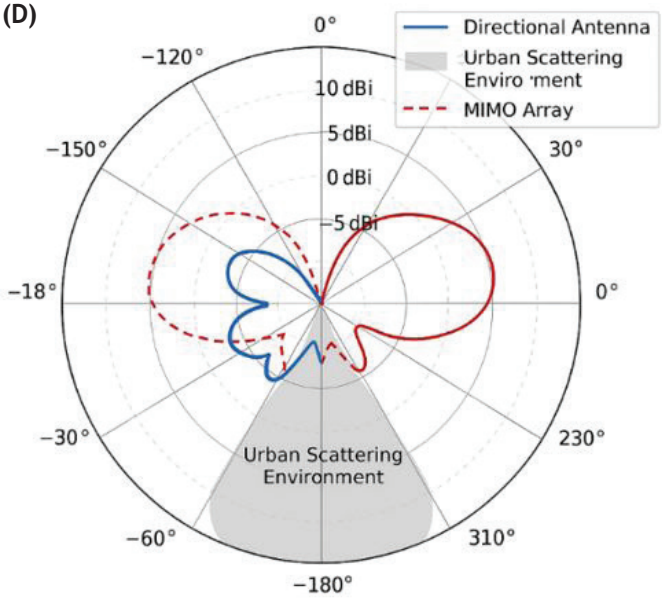

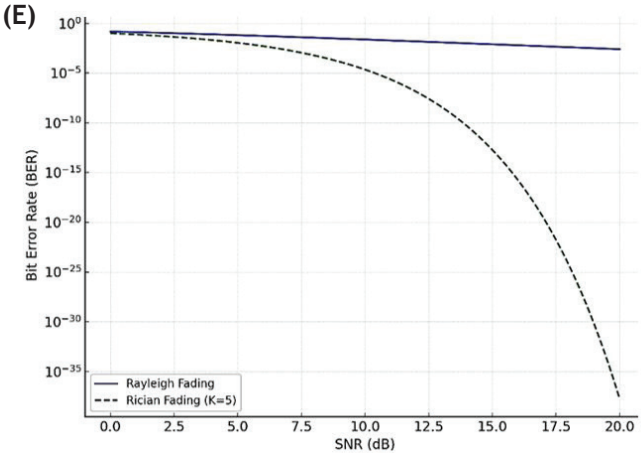

Fig. 2: (A) Fading and shadowing profile across a sample wireless region, (B) Path loss versus distance comparison for models, (C) Radiation patterns of omnidirectional versus directional antennas at 5.2 GHz and 28 GH, (D) Simulated gain patterns of MIMO versus directional antennas under urban multipath conditions, (E) BER versus SNR under Rayleigh and Rician fading models in LOS/NLOS scenarios.

In order to make further quantification of the antenna diversity effect, we introduce simulated patterns of gain under urban multipath conditions. A radiation pattern of directional patch antenna and 2 × 2 MIMO configurations was evaluated on CST Microwave Studio at 2.4 GHz and 5.2 GHz frequency. Then MIMO arrays, having elements that are spatially diverse, preserve more signal robustness in the LoS and NLoS paths where surfaces and walls block their path, whereas directional antennas allow greater peak gain with considerably narrow coverage. Secondly, MIMO polarization diversity decreases cross-path, and increases signal clarity, in mobile deployments.

The figure shows the radiation patterns of omnidirectional versus directional antennas at 5.2 GHz and 28 GHz (Figure 2C), and the simulated gain patterns of MIMO versus directional antennas under urban multipath conditions (Figure 2D). These figures illustrate the differences in antenna performance across frequencies and environments.

Fading Channel Impact on QoS Metrics

Other than large-scale path loss and shadowing, it is also found that small-scale fading effect, like Rayleigh and Rician fading, greatly impacts on QoS performance on wireless multimedia systems. Such channel variations lead to oscillations in signal power, bit error rate (BER), and instantaneous data rates, which have direct implications to the corresponding metrics of the higher layers, including delay, jitter, and throughput.

Fading can also be modeled statistically. As another example, the Rayleigh fading distribution operates in models of nonline-of-sight (NLOS) environments, whereas Rician models' behavior is found under a dominant line-of-sight (LOS) path. The Rayleigh fading has distribution of SNR, and it is exponential, in Equation 3:

$$f_\gamma(\gamma) = \frac{1}{\gamma} e^{-\frac{\gamma}{\gamma}} \tag{3}$$

where γ is the instantaneous SNR, and γ¯ is the average SNR.

The corresponding BER for BPSK in Rayleigh fading is expressed as, in Equation 4:

$$P_b = \frac{1}{2}\left(1 - \sqrt{\frac{\gamma}{1+\gamma}}\right) \tag{4}$$

With the increased BER arising as a result of fading, retransmissions increase, consequently resulting in an increase in the delay as well as jitter in the case of video transmission over UDP. Additionally, under dynamic channel conditions, the Doppler shift $f_D = \frac{vf_c}{c}$ characterizes the channel coherence time, which is essential for determining the optimal frequency at which the system should adjust link parameters to maintain performance. Such expired models are being used in conditions of simulation to view the impact they had on multimedia measurements to include PDR and PSNR, both in urban and indoor contexts.

Figure 2E illustrates the Bit Error Rate (BER) versus Signal-to-Noise Ratio (SNR) under Rayleigh and Rician fading models for Line-of-Sight (LOS) and Non-Line-of-Sight (NLOS) scenarios. The graph shows the impact of different fading models on BER performance across varying SNR levels.

Mobility-Aware RF Propagation and QoS

In antennas, the user mobility influences covering, antenna alignment, Doppler shift, and handover latency, mostly in the directional/beamforming antenna. The higher the velocity of the nodes, the higher the possibility of misalignment, which can worsen SINR and lead to route failures or stream discontinuity.

The framework adjusts the choice of channel and dynamically controls the orientation of the antenna in

Table 2: SNR and handover latency versus mobility speed for directional antennas.

Mobility Speed (m/s)	SNR (dB) - 5.2 GHz	SNR (dB) - 28 GHz	Handover Latency (ms) - 5.2 GHz	Handover Latency (ms) - 28 GHz
0	42.5	39.2	35	50
1	37.8	30.7	50	75
2	33.1	24.5	68	105
3	28.6	18.3	82	135

real-time. The hand-over logic is modified with respect to angular deviation and speed.

The Table 2 shows the impact of mobility speed on SNR and handover latency for directional antennas at 5.2 GHz and 28 GHz. As mobility speed increases, SNR decreases and handover latency increases. This trend is observed for both frequency bands.

Cross-Layer Adaptation Mechanism

A cross-layer feedback and coordination mechanism forms the elephant in the proposed architecture that guarantees each layer of the communication stack not only to perform its main purpose properly but also to cooperate dynamically with other layers to improve the end-to-end multimedia performance. This is what allows context-aware and proactive adaptation, and this is what guarantees that QoS will be provided in spite of unfavorable wireless conditions, for example, caused by congestion, mobility, or channel fading.

MAC-Application Interaction

Another significant development stemming out of the proposed framework is that of direct interaction between the MAC and the application layer not being flanked by the conventional restrictions of the layered protocol stack. The MAC layer keeps a track on real-time channel access statistics including collision rates, queue occupancy, average packet delay, and the number of successful transmissions. Periodically, these statistics are summarized and are transmitted to application layer via a common feedback interface.

Queueing Delay (M/M/1 approximation), in Equation 5:

$$D_{queue} = \frac{1}{\mu - \lambda} \tag{5}$$

Where:

- λ: Packet arrival rate
- μ: Service rate (based on channel availability)

This data are then used by the application layer to make intelligent decisions about multimedia encoding, for example, modifying bit rates, frame rates, and indeed even compression schemes in response to the amount of traffic available in the underlying medium. An example would be that a peak in MAC-layer retransmission attempts or collisions might cause a temporary frame-reduction in video resolution or bitrate to offset possible buffer underruns and video playback with poor or no quality.

PHY-Network Integration

Combining the PHY and network layers and operating within the lower levels of the stack are critical in enhancing route stability and resilience. These instantaneous measurements, made by the PHY layer, include SNR path loss and fading statistics (modelled with Nakagami-m and log-normal shadow) to measure from the PHY layer. The network layer has a routing engine that takes in these PHY-layer metrics. In comparison to the traditional routing protocols which only depend on the hop count or the queue delay, the new delay-aware AODV protocol takes into consideration these PHY indicators to determine the reliability of every link. When the quality of a link deteriorates—whether caused by mobility, interference, or changing environmental conditions—the routing layer will have been proactive in prompting a route re-discovery process to ensure that better channels in terms of channel quality have been found ensuring continuity and integrity of multimedia streams.

Joint Decision Engine

Fuzzy rule base logic controller in the joint decision engine has been used, and it employs a rule-based inference system to evaluate the real-time network status at PHY, MAC, and application layers. Such rules will be developed based on linguistic variables and conditional logic where network performance indicators are linked to the correct control actions. In particular, a representative fuzzy rule can be taken as:

In the case where SNR is low and end-to-end delay is high and buffer occupancy is low, then aggressively use video bitrate.

This rule is an extreme scenario in which the PHY layer detects a worsening channel, the MAC layer reports congestion-generated latency, and an application layer reports a danger of playback stoppage because of the lack of buffering. In that way, by offensively lowering the encoding bitrate, there is the counter of quality degradation and stalling that might occur in playback demanding video. A rule base consists of a wide variety of such logical constructs where input variables linguistically used are {low, medium, and high}, and the control action linguistically used are {no change, moderate reduction, and aggressive reduction}. This makes it possible to do dynamic, visualizable, and fine-grained QoS adaptation on a varied network condition.

Antenna Diversity-Aware Scheduling

As an approach to increase the robustness of the links in conditions of a variable channel, the proposed architecture takes into consideration antenna diversity methods including spatial and polarization diversity. With the support of a number of antennas or orthogonality polarization, the system would overcome the intrigue of fading that originates packet loss and provides a balance to multimedia quality. Figure 3 depicts Cross-layer adaptation mechanism and Figure 6 shows the antenna gain patterns that can direct the weights of the utility functions in the cross-layer scheduler based on effective angular coverage and polarization match as executed on a link-by-link basis over real time. It is envisaged that a cross-layer approach to scheduling could dynamically tune routing and transmission priorities based on real-time estimates of:

- Signal strength (RSSI) from diverse antenna paths
- Antenna gain profiles under varying orientation or blockage
- Buffer occupancy status at the application layer

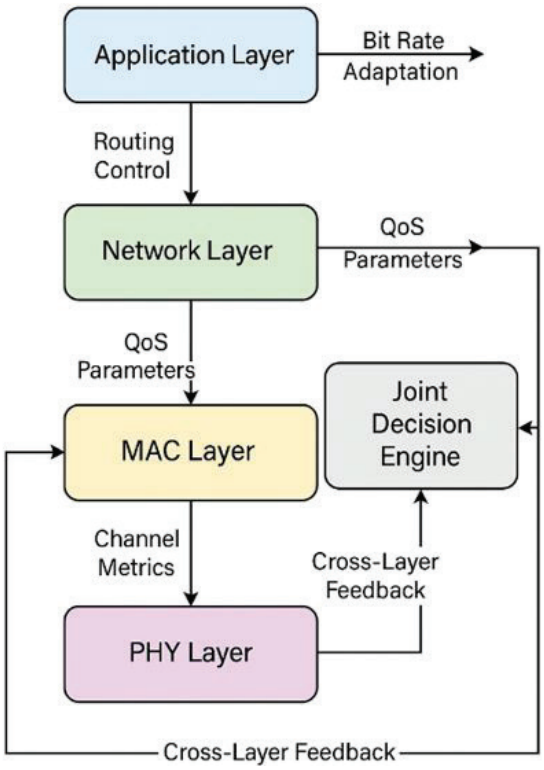

Fig. 3: Cross-layer adaptation mechanism

Parameter Notes

- α, β, and γ represent the importance of RSSI, antenna gain, and buffer urgency respectively.

Algorithm 1. Diversity-aware cross-layer scheduling.

Algorithm DiversityAwareCrossLayerScheduling

Inputs: RSSI [1…N], G [1…N], Buffer [1…N]

Outputs: P [1…N] // Priority weights for each stream

1: for i = 1 to N do

2: Normalize RSSI_i: R_norm[i] ← RSSI_i / max (RSSI)

3: Normalize Gain: G_norm[i] ← G_i / max(G)

4: Normalize Buffer: B_norm[i] ← 1 - (Buffer_i / MaxBuffer) // Lower buffer => higher priority

5: Compute Utility:

U[i] ← α × R_norm[i] + β × G_norm[i] + γ × B_norm[i]

6: end for

7: Normalize Priority Weights:

for i = 1 to N do

P[i] ← U[i] / sum(U)

end for

8: Sort streams based on descending P[i] for transmission scheduling

End Algorithm

- Example: $\alpha = 0.3$, $\beta = 0.3$, $\gamma = 0.4$
- $Buffer_i$ is inverted because a low buffer level indicates urgency (higher priority).

Simulation Setup and Scenarios

To prove its performance capability, the suggested CLF to support QoS-aware multimedia streaming was simulated comprehensively through the NS-3.36, a discrete-event network, simulator capable of depicting a wireless environment, mobility, as well as an interaction of protocols accurately. This section briefly describes the comparison parameters in the simulation, traffic models, mobility scenarios, protocol, and baselines.

Simulation Environment

The set of nodes in the simulation environment will be 50 mobile nodes, randomly and evenly scattered inside a 1000 × 1000 m square field. Nodes are fastened together via Wi-Fi 802.11 along with realistic models of propagation that incorporate Nakagami-m fading and log normal shadowing as in the section on "Channel and propagation modelling." All the nodes are installed with homogenous reach of transmission and set up to carry out the routing protocols and multimedia data.

Traffic Model

This data traffic is produced with H.264 video trace files, which make use of compressed multimedia streams. These packets are packetized in UDP to emulate a common delay-based video delivery scenario. Such a setup precludes the retransmission delay present in TCP and thus the simulation is closely allied to real-time streaming constraints. To quantify end-to-end delay, jitter, and PDR, each packet is labeled with timestamps.

Mobility Model

The Gauss–Markov mobility model is used to provide realistic patterns of movement present in mobile ad hoc environments. This model encapsulates the fact that velocity and direction change smoothly and that the level of randomness is controlled, as is the mobility of the user in outdoor settings, be it the vehicular or the pedestrian networks. Differing simulation runs are used to test the protocol performance in a range of 1 m/s–20 m/s of node speed.

Simulation Duration and Metrics

The simulation scenarios are run over a time interval of 300 seconds to get sufficient time to study transient as well as steady-state behaviors of the protocols. The tracking of the following key performance indicators is done:

- PDR—The ratio between the number of appropriately received packets to the number of packets sent.
- Average End-to-End Delay—Delay incurred by a packet to move across source to destination.
- Throughput— Denotes rate of successfully delivered bits per second.
- PSNR—Quality parameter, which is calculated on the basis of the received video stream.
- Jitter-See randomness in reception of packets which has effects on playback.

Protocols Under Comparison

In determining the effectiveness of the proposed cross-layer strategy, three set-ups of the protocols are pitted against each other:

1. Standard UDP on AODV: This is a conventional isolation of AODV routing that has no cross-layer optimization and MAC adaptation.
2. MAC-Layer Adaptation UDP: The version uses adaptive CSMA/CA to include prioritized queueing but does not employ PHY-layer propagation feedback and application-level adaptation.
3. Suggested CLF: The entire system merged with PHY-conscientious routing, MAC adaptation, common QoS feedback, and use-level rate control.

RF-Aware Simulation Co-Design

The simulation has been disseminated to co-simulate both RF PHY-layer and antenna-specific parameters. When taking such an approach of NS-3 and using its MATLAB PHY layer integration, the model encapsulates RSSI and SINR as a point of variation with change of antenna patterns.

- Estimation of Doppler spread in mobile node
- Mismatch and gain degradation of polarization

This allows more realistic emulation of electromagnetic interactions of QoS-sensitive multimedia applications.

Results and Analysis

The proposed CLF) has been compared to two reference settings such as standard UDP over AODV and UDP with MAC-layer adaptation in case of different conditions of mobility and network load. The findings indicate that

the CLF offers better QoS to multimedia streaming by adequately making use of cross-layer feedback and real-time propagation-aware decision-making.

The dependency between PDR and node speed is shown in Figure 4. The instability of links and breakages in routes has resulted in a negative outcome as the delivery ratio decreased in all the protocols with mobility. Nonetheless, the presented CLF has a significantly more constant PDR at various speeds, reaching 91.7% in the worst case, whereas in the case of MAC-only at 81.3% and the standard AODV 72.5%. This is because the routing decisions made this time pay attention to the PHY-layer link quality consciousness, This allows the CLF to more effectively avoid weak or degraded links, ensuring better routing decisions.

Figure 5A,B shows the average end-to-end delay with different network loads. The fixed UDP+AODV protocol delay grows tremendously when traffic is high because of congestion and frequent route discovery. The MAC-only scheme, which applies an adaptive contention control, alleviates part of the delay, though not as wide justification of the system. On the other hand, CLF presents the best average delay with the value of about 120 ms combining application rate adaptation, MAC-level queue control, and network-layer rerouting to guarantee that applications are delivered when there is heavy load.

The received video stream is subjected to the PSNR provided in Figure 5B as a perceptual measure of playback quality. The CLF achieves the best PSNR of 35.2 dB, which is better than MAC-only (31.8 dB) and standard UDP (29.4 dB). This is mostly because of lower packet loss and Jitter, achieved through the predictive real-time adjustment of video bitrate to the channel and buffer characteristics offered by the CLF.

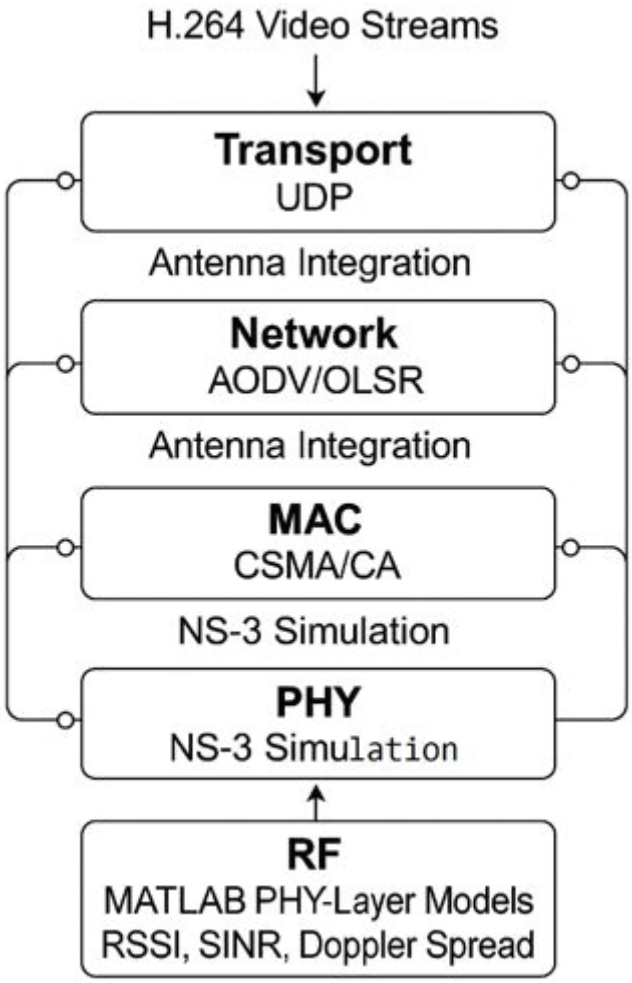

Fig. 4: End-to-end simulation stack with antenna integration points

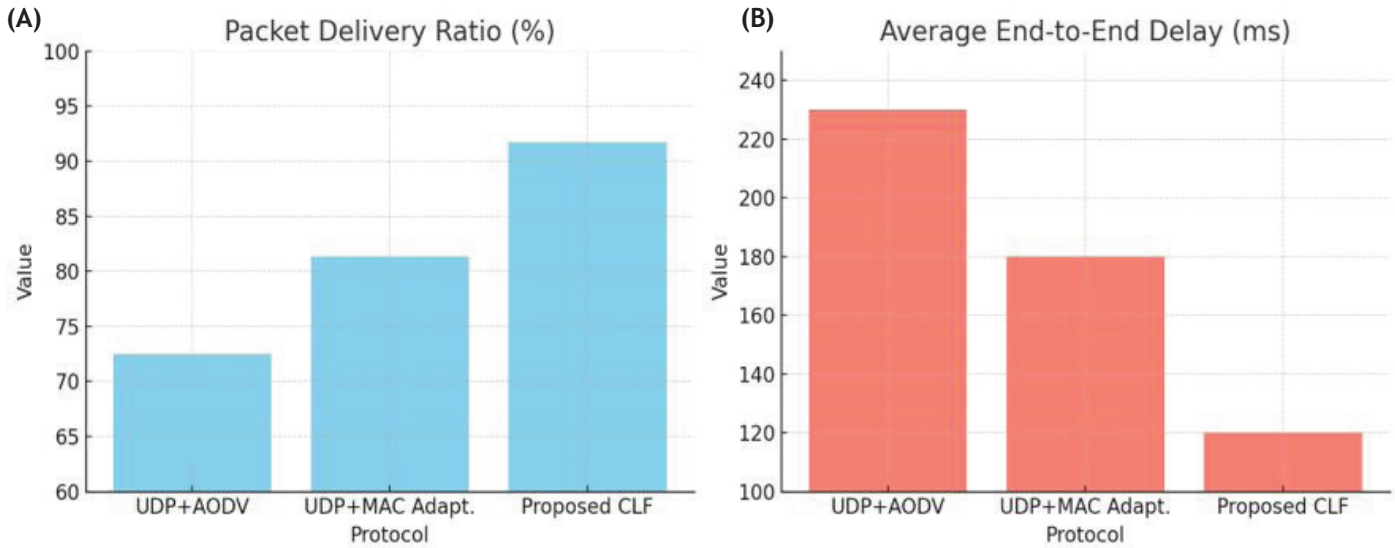

Fig. 5: (A) Packet delivery ratio versus (B) node speed and end-to-end delay under varying network loads

These main performance measures are summarized in Table 3 in quantitative terms. The CLF performs dramatically better in all criteria, PDR, delay, and PSNR, and hence this is a good reason to show its utility in keeping video QoS under diversified and dynamic wireless conditions. The cross-layer coordination plays a significant role in that the CLF has always performed better in all instances, particularly in the case of the environments prone to mobility, fading, and congestion.

Figures 6A,B compare video playback quality (PSNR in dB) and throughput (Mbps) across different protocols. Figure 6A shows the PSNR values for UDP+AOAV, UDP+MAC Adapt Protocol, and Proposed CLF, while Figure 6A illustrates the throughput performance for the same protocols.

Conclusion

This paper introduced a new CLF of QoS-aware multimedia streaming in the HWNs. Responsive to dynamic channel conditions, the framework is able to respond to real-time conditions by tightly coupling PHY-layer propagation awareness, MAC-level contention adaptation, network-layer routing optimization, and application-level bitrate control. The simulation studies performed with NS-3 in a large scale showed that indeed the proposed system provides good results, as it is able to increase the PDR, decrease the end-to-end delay, and improve video playback quality (PSNR) compared to the conventional UDP and MAC-adaptive schemes.

Table 3: Performance metrics summary

Metric	Standard UDP+AODV	UDP + MAC Adaptation	Proposed CLF
Packet Delivery Ratio (PDR) [%]	72.5	81.3	91.7
Average End-to-End Delay [ms]	230	180	120
Video Quality (PSNR) [dB]	29.4	31.8	35.2

Moreover, addition of parameters of electromagnetic-layer of parameters on the decision-making logic as signal strength (RSSI), antenna gain, and Doppler spread enhances responsiveness of the system in case of mobility and fading. The inclusion of the antenna system behavior, RF propagation modeling, and PHY -layer performance measures in the adaptive scheduling and routing processes means that the framework not only moves beyond the generic QoS models but also into the realm of the dynamic design requirements of an RF-aware communication system. On the whole, the given framework provides a scientifically consistent, component-based, and extendible platform to distribute multimedia applications resiliently in spite of the actual conditions of wireless networks.

Future Work

Although the current implementation proves to be of high performance, there are a couple of fundamental directions still waiting to be explored. One potential avenue is to adapt RL techniques to rely on the framework to learn optimal adaptation policies on the fly, causing less reliance in manually tuned thresholds, and an increased responsiveness to certain unpredictable network behaviors. Also, the opportunity to upgrade the system to work with mmWave and the newest 6G communication systems offers the possibilities to deal with the existing challenges, including beamforming, blockage resilience, and high-frequency channel

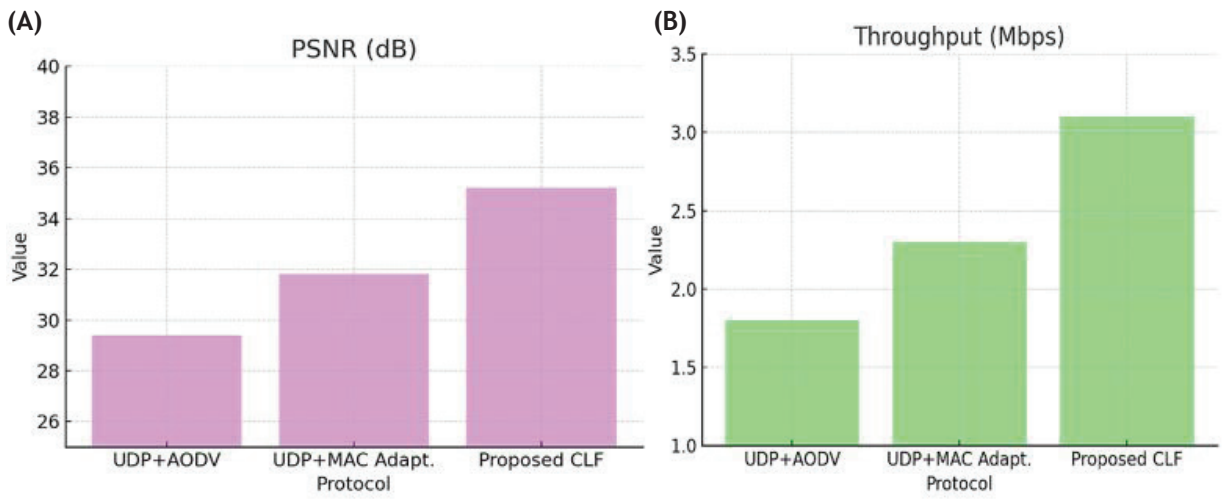

Fig. 6: (A) Video playback quality (PSNR) and (B) throughput Mbps

variability that can be solved with predictive, cross-layer decision-making. Applicable in the real-world scenario, the framework will be apportioned to actual deployment to be included in functioning multimedia systems, days of video conferencing and IPTV services, and allowing performance comparison in field-deployed HWNs and realistic testbed systems. In addition, the future versions will also consider energy-aware and battery-wise approaches, and the system will optimize not only QoS but also sufficient power efficiency where mobile and IoT deployments are critical. In combination, these extensions will convert the suggested framework to be a smart, expandable, and energy-conservative next-generation wireless multimedia conjugation delivery solution.

References

1. Yemunarane, K., Chandramowleeswaran, G., Subramani, K., Alkhayyat, A., & Srinivas, G. (2024). Development and management of E-Commerce information systems using edge computing and neural networks. Indian Journal of Information Sources and Services, 14(2), 153–159. https://doi.org/10.51983/ijiss-2024.14.2.22
2. Saini, R., Souza, J. A. D., Prakash, S. R., Hota, S., Mamatha, G. N., & Goswami, S. (2025). Adaptive load balancing in heterogeneous wireless mobile networks. Journal of Wireless Mobile Networks, Ubiquitous Computing, and Dependable Applications, 16(2), 119–135. https://doi.org/10.58346/JOWUA.2025.I2.008
3. Mahmood, A. N., Mahmud, M. N., & Salleh, M. F. M. (2025). Challenges and solutions for video streaming services quality of experience (QoE) prediction toward 6G wireless networks. Journal of Internet Services and Information Security, 15(2), 694–726. https://doi.org/10.58346/JISIS.2025.I2.047
4. Pragadeswaran, S., Subha, N., Varunika, S., Moulishwar, P., Sanjay, R., Karthikeyan, P., Aakash, R., & Vaasavathathaii, E. (2024). Energy efficient routing protocol for security analysis scheme using homomorphic encryption. Archives for Technical Sciences, 2(31), 148–158. https://doi.org/10.70102/afts.2024.1631.148
5. Ibrahim, M. S., & Shanmugaraja, P. (2023). Mobility based routing protocol performance oriented comparative analysis in the ADHOC networks FANET, MANET and VANET using OPNET Modeler for FTP and web applications. International Academic Journal of Innovative Research, 10(1), 14–24. https://doi.org/10.9756/IAJIR/V10I1/IAJIR1003
6. Mohammed, A. H. (2024). Channel bonding effects of the IEEE802.11n standard on the WLANs performance. International Academic Journal of Science and Engineering, 11(1), 213–220. https://doi.org/10.9756/IAJSE/V11I1/IAJSE1124
7. Stockhammer, T. (2011). Dynamic adaptive streaming over HTTP—Standards and design principles, in Proc. ACM MMSys, San Jose, CA, USA, pp. 133–144.
8. Wu, D., Hou, Y. T., & Zhu, W. (Mar. 2001). Streaming video over the Internet: Approaches and directions. IEEE Transactions on Circuits and Systems for Video Technology. 11(3), 282–300.
9. Perkins, C. E., & Royer, E. M. (1999). Ad-hoc on-demand distance vector routing, in Proc. 2nd IEEE Workshop on Mobile Computing Systems and Applications, New Orleans, LA, USA, pp. 90–100.
10. Marina, M. K., & Das, S. R. (2001). On-demand multipath distance vector routing in ad hoc networks, in Proc. IEEE ICNP, Riverside, CA, USA, , pp. 14–23.
11. IEEE Standard for Information Technology—Telecommunications and Information Exchange Between Systems—Local and Metropolitan Area Networks—Specific Requirements—Part 11: Wireless LAN Medium Access Control (MAC) and Physical Layer (PHY) Specifications—Amendment 8: Medium Access Control (MAC) Quality of Service Enhancements, IEEE Std 802.11e-2005, 2005.
12. Li, J., & Raychaudhuri, D. (2004). Cross-layer optimization for real-time video streaming in multihop wireless ad hoc networks, in Proc. IEEE VTC Spring, Milan, Italy, pp. 2158–2162.
13. Zhang, X., Zhang, Q., & Yang, Y. (May 2021). Cross-layer rate adaptation for multimedia streaming in mobile networks. IEEE Transactions Mobile Computing, 20(5), 1684–1698.
14. Liu, W., Zhang, J., & Li, B. (2020). MAC-aware video streaming with QoE optimization in wireless networks, in Proc. IEEE INFOCOM, Toronto, ON, Canada, 1452–1460.
15. IEEE Std 802.21-2008, IEEE Standard for Local and Metropolitan Area Networks—Part 21: Media Independent Handover Services, Jan. 2009.
16. El Khatib, M., Benslimane, A., & Mostarda, L. (Jul. 2019). QoS-aware cross-layer routing in VANETs using signal quality metrics, Ad Hoc Netw., 91, 101899.
17. Gupta, R. K., & Rani, S. (Nov. 2020). Cross-layer congestion-aware routing in mobile ad hoc networks. Wireless Personal Communications, 111(1), 413–429.
18. Anandhi, S., Rajendrakumar, R., Padmapriya, T., Manikanthan, S. V., Jebanazer, J. J., & Rajasekhar, J. (2024). Implementation of VLSI systems incorporating advanced cryptography model for FPGA-IoT application. Journal of VLSI Circuits and Systems, 6(2), 107–114. https://doi.org/10.31838/jvcs/06.02.12
19. Michael, P., & Jackson, K. (2025). Advancing scientific discovery: A high-performance computing architecture for AI and machine learning. Journal of Integrated VLSI, Embedded and Computing Technologies, 2(2), 18–26. https://doi.org/10.31838/JIVCT/02.02.03
20. Vincentelli, B., & Schaumont, K. R. (2025). A review of security protocols for embedded systems in critical infrastructure. SCCTS Journal of Embedded Systems Design and Applications, 2(1), 1–11.
21. Arun Prasath, C. (2025). Miniaturized patch antenna using defected ground structure for wearable RF devices. National Journal of RF Circuits and Wireless Systems, 2(1), 30–36.
22. Kavitha, M. (2024). Enhancing security and privacy in reconfigurable computing: Challenges and methods. SCCTS Transactions on Reconfigurable Computing, 1(1), 16–20. https://doi.org/10.31838/RCC/01.01.04